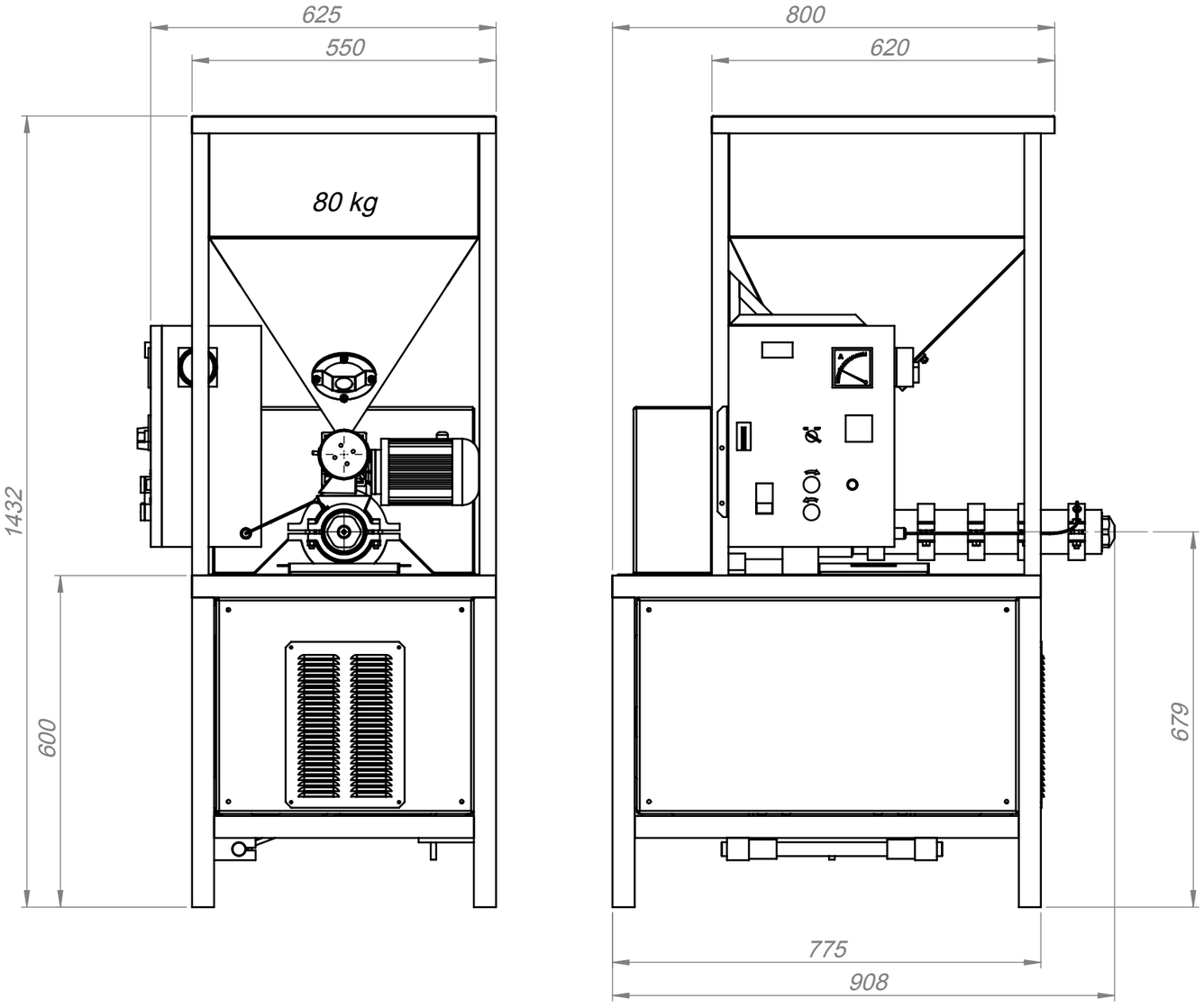

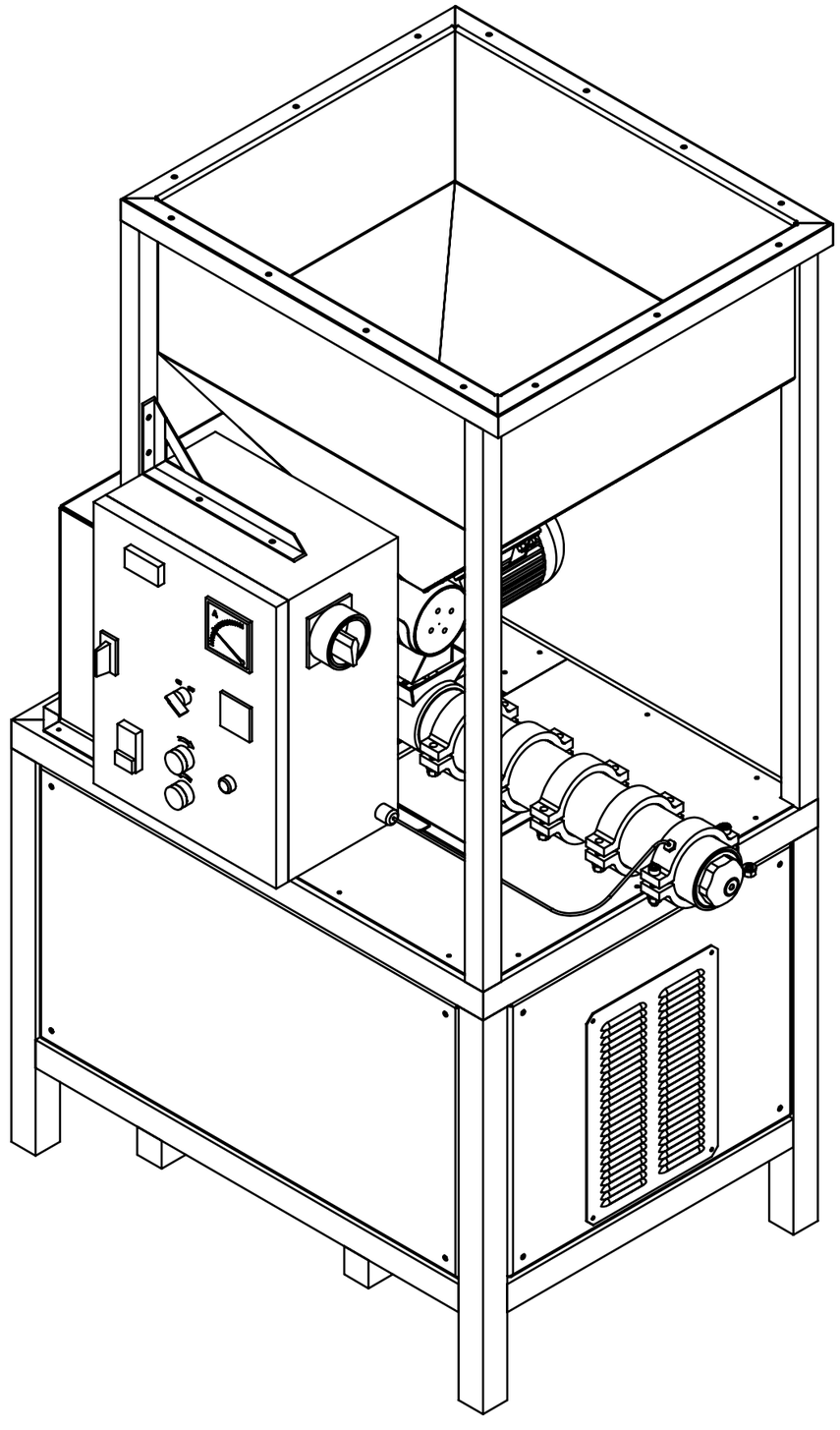

- *Type: Extruder SSE 200*
- *Driving power: 22 kW*
- *Dosage power: 0.25 kW*
- *Product capacity: 200-220 kg/h*
- *Even dosage*
- *Easy maintenance*
- *Simple, easy to use*

NON-STOP
ROTATION

www.elektromotor-simon.com - office@elektromotor-simon.com - Tel.: +38124/815-878 - Fax.: +38124/812-599 - Serbia - Senta - 24400 - Vuka Karadzica 23